53 Wootton Drive
Hemel Hempstead
Hertfordshire
HP2 6LA
United Kingdom

Tel.: +44 (0) 1442 395614
E-Mail: info@plasmamusic.com

CHEETAH MS6 SCHEMATICS

While building an external power supply for a Cheetah MS6, I found some schematics that had been scanned at reasonably good resolution. Unfortunately, they had not been stitched together.

In my humble attempts to keep vintage gear alive, I have edited the document and provided pages to make reading the schematics a little easier for anyone who may need them.

MS6 Power Supply

MS6 D/A

MS6 Auto Correct and Noise

MS6 Voice 1

MS6 Voice 2

MS6 Voice 3

MS6 Voice 4

MS6 Voice 5

MS6 Voice 6

MS6 Sample & Hold and Decoupling

MS6 CPU Part A

MS6 CPU Part B (MIDI, display and buttons)

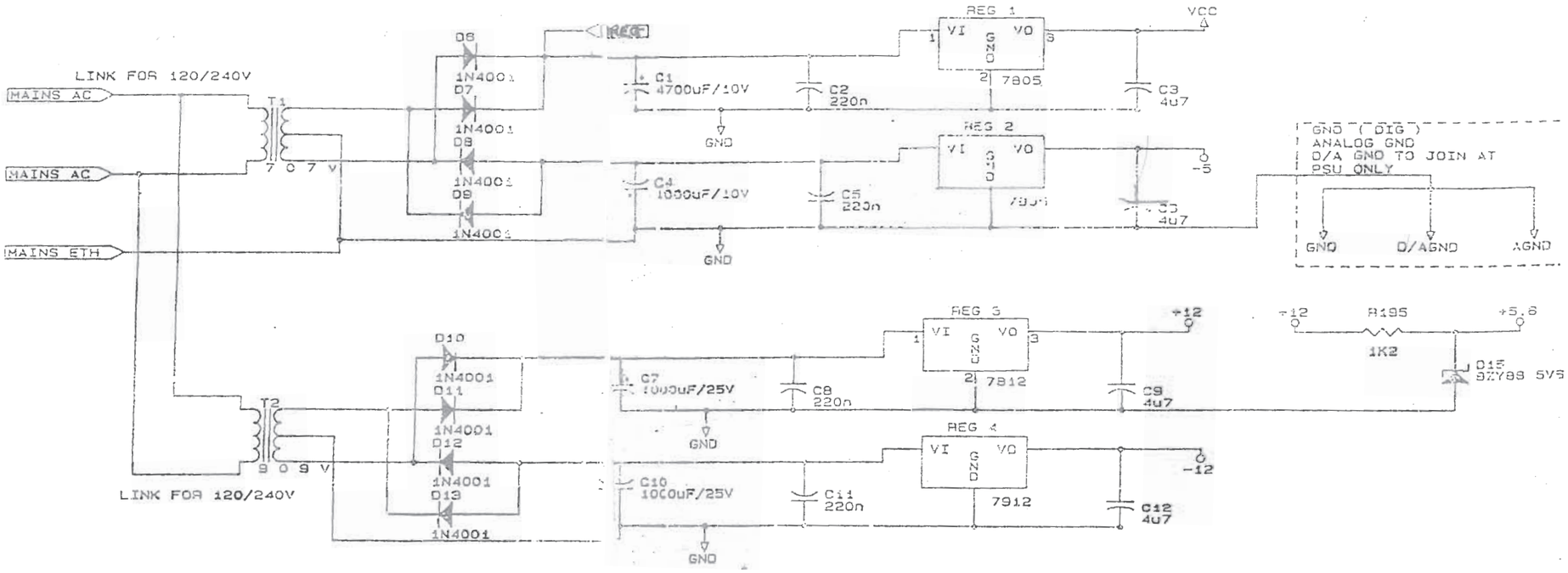

Title	MSS POWER SUPPLY CCT DIAGRAM	
Size B	Document Number	REV D
Date: March 13, 1990	Sheet 1 of 12	

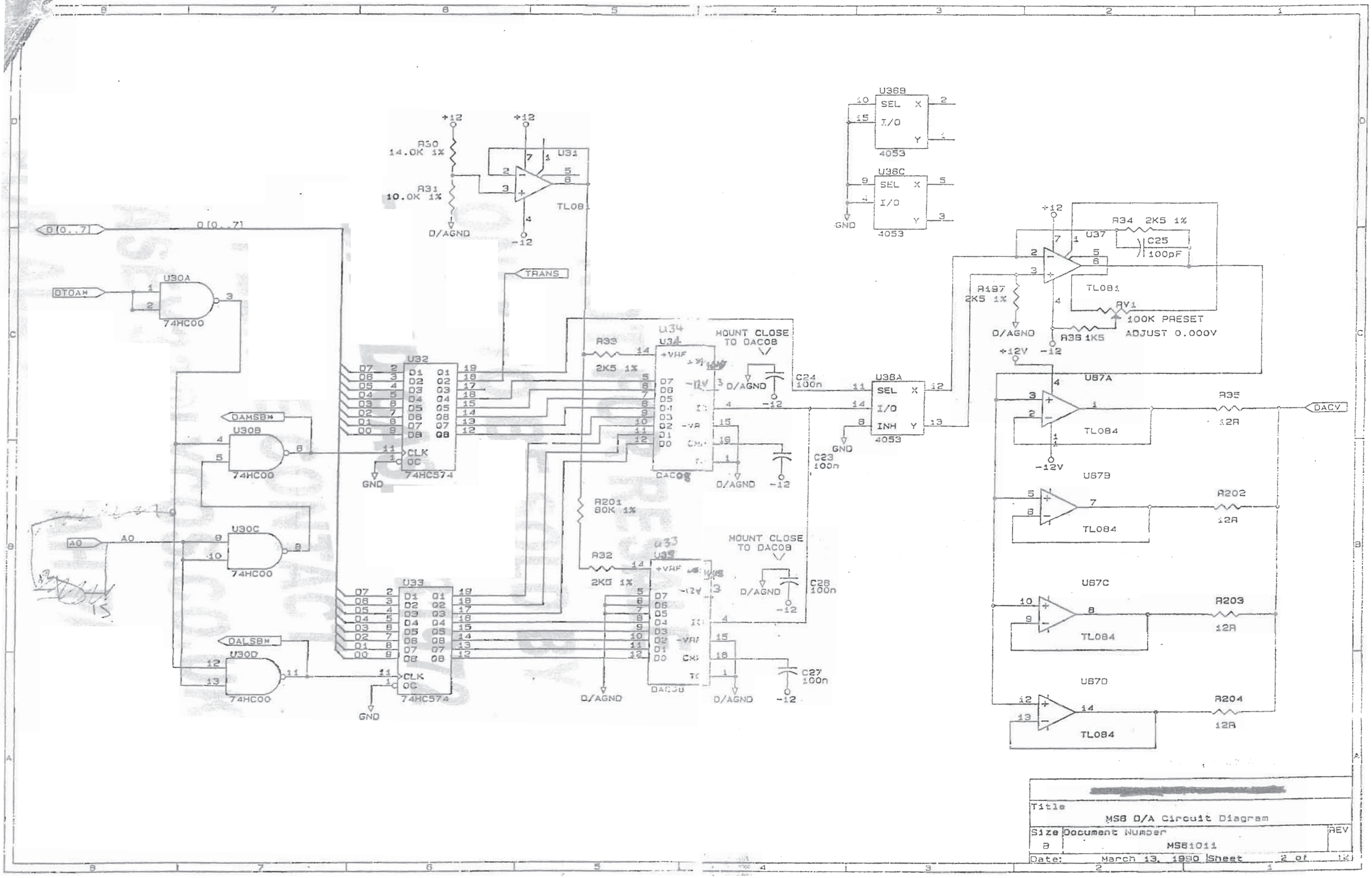

Title	MS8 D/A Circuit Diagram	
Size: B	Document Number: MS81011	REV
Date: March 13, 1990	Sheet 2 of 12	

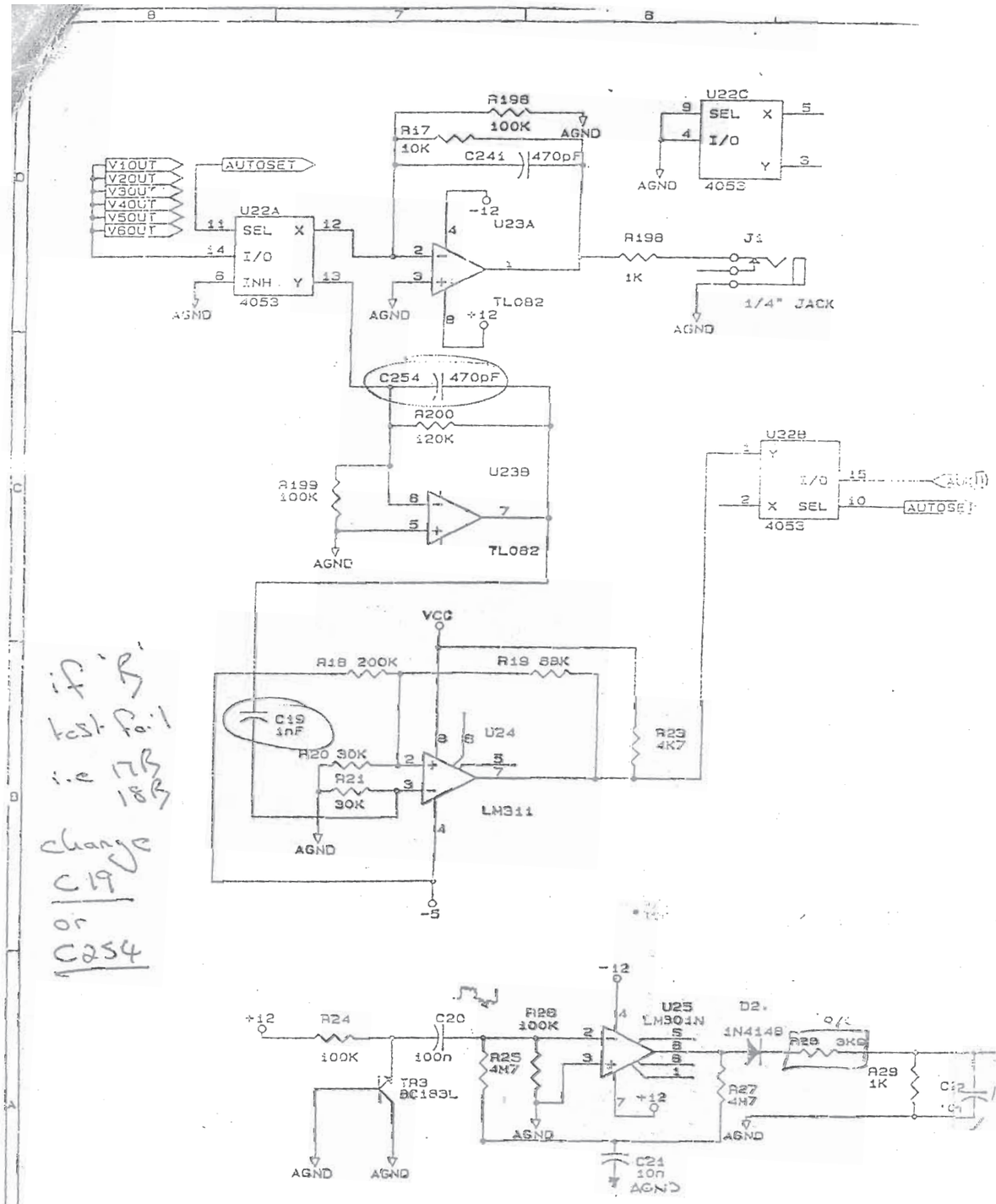

if 'R' test fail i.e 17R 18R

change C19 or C254

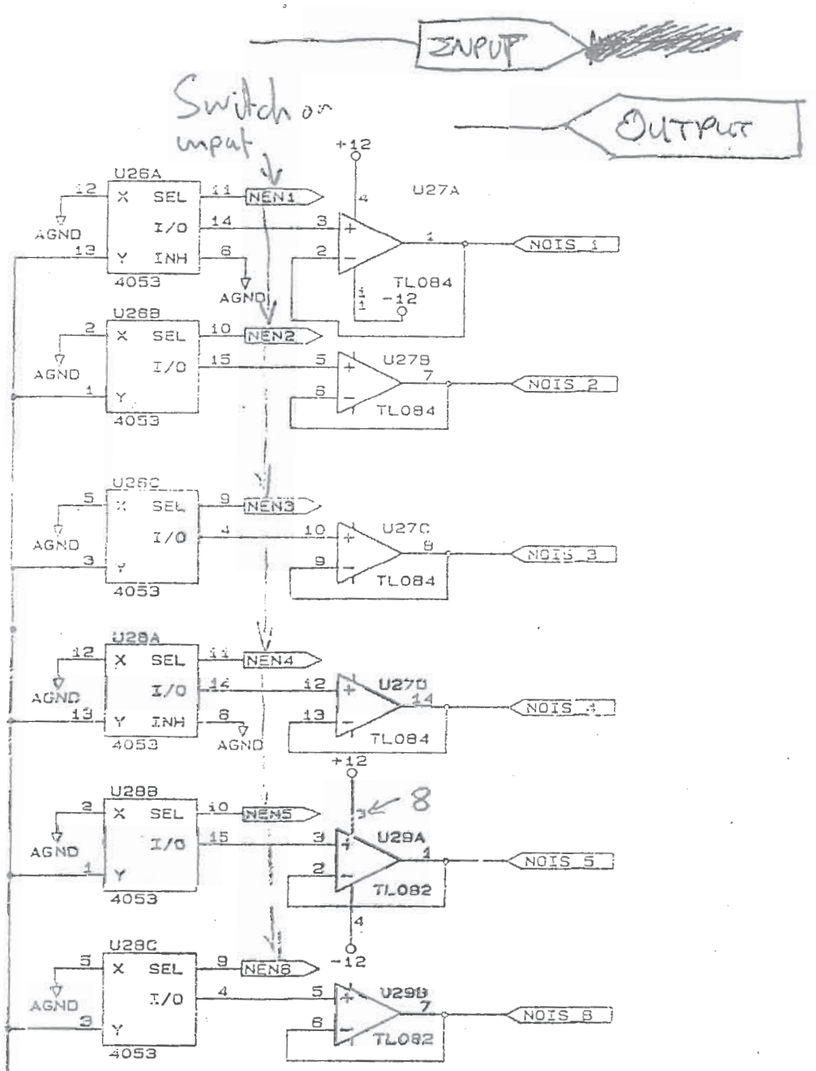

Title: MS8 AUTO CORRECT + NOISE CCT DIAGRAM

Size: B | Document Number: MS81013 | REV: B

Date: March 13, 1990 | Sheet 3 of 12

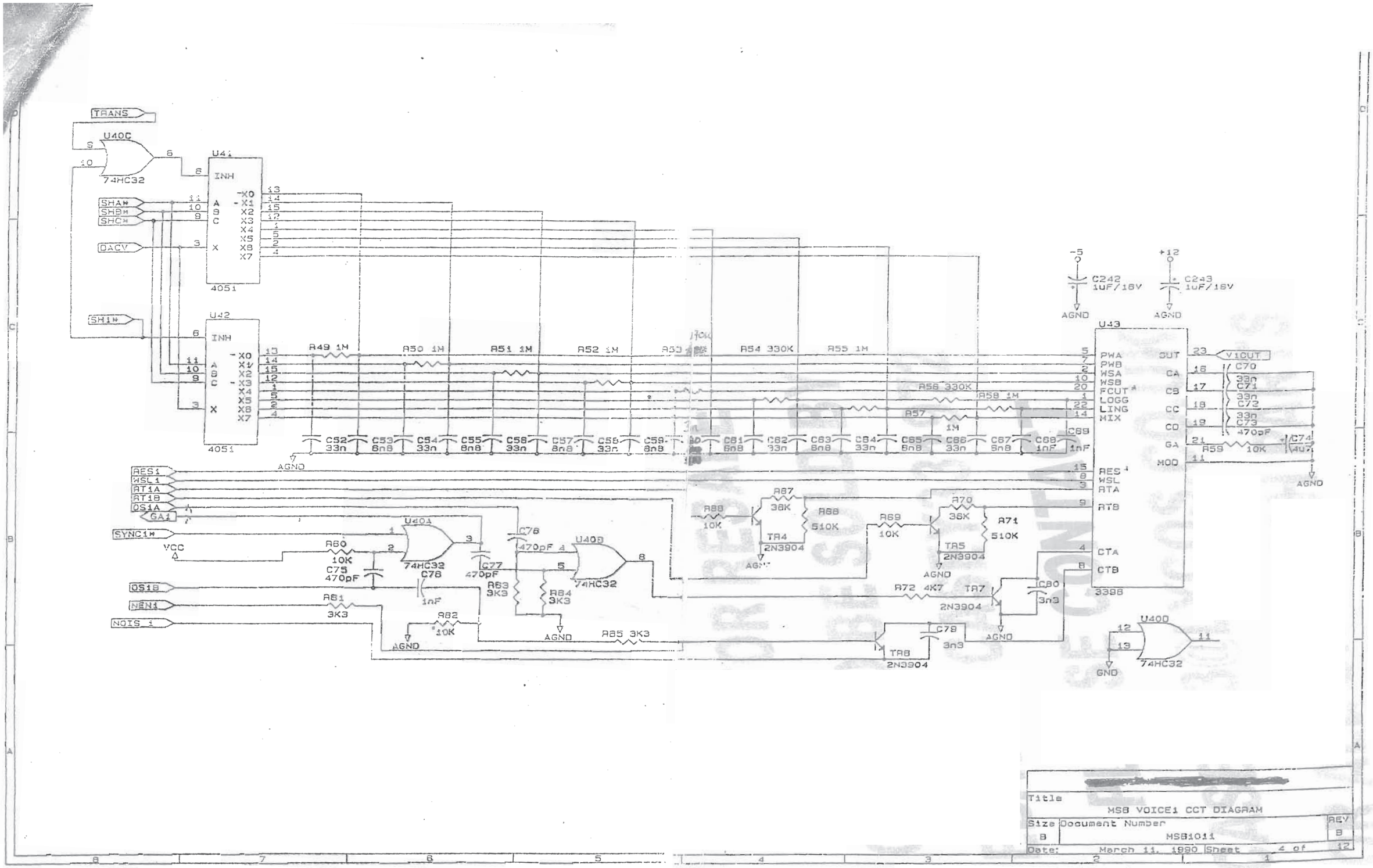

Title	MSB VOICE1 CCT DIAGRAM	
Size B	Document Number MSB1011	REV B
Date: March 11, 1990	Sheet 4 of 12	

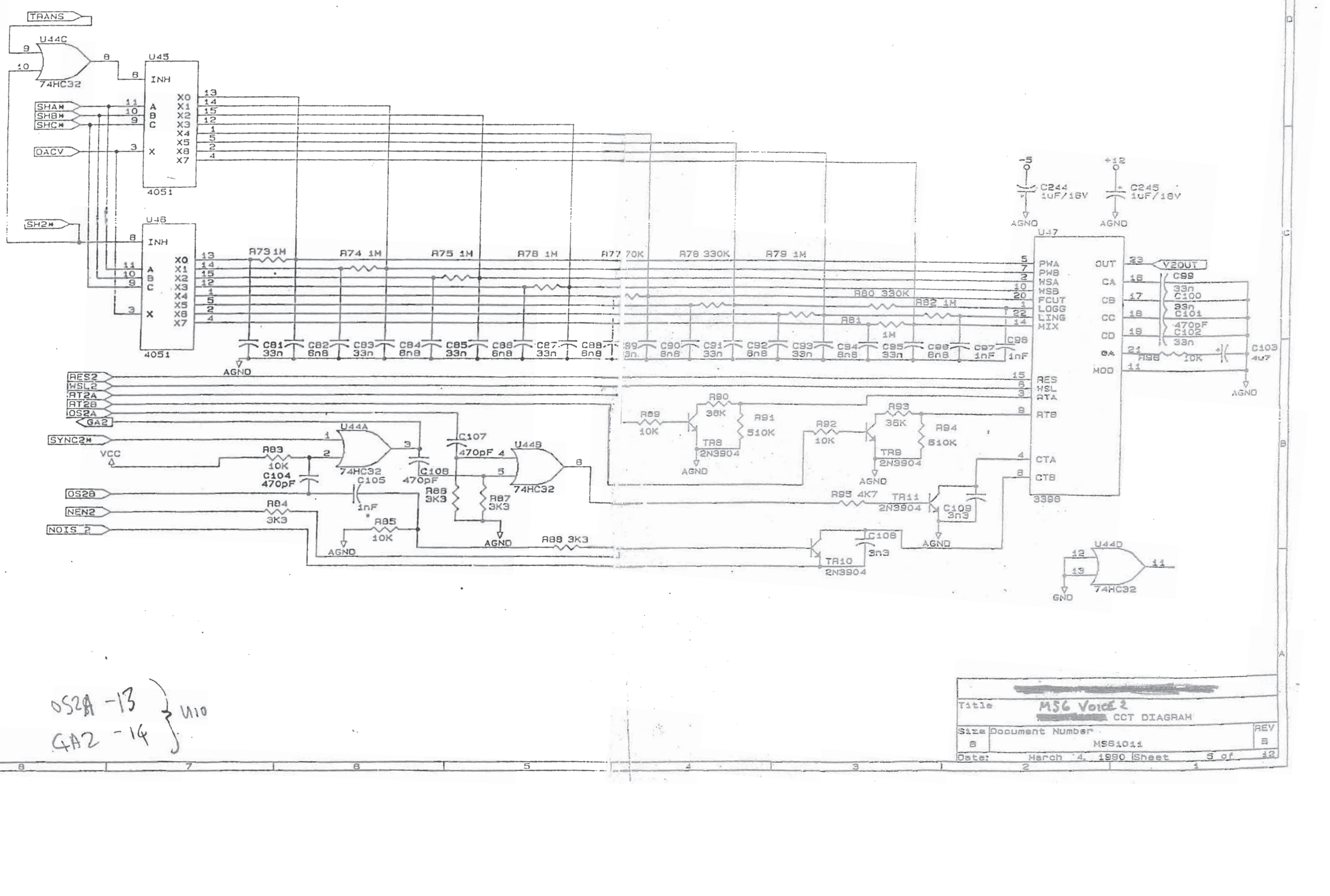

Title	MS6 Voice 2 CCT DIAGRAM		
Size B	Document Number MS61011		REV B
Date: March 4, 1990	Sheet 5 of 12		

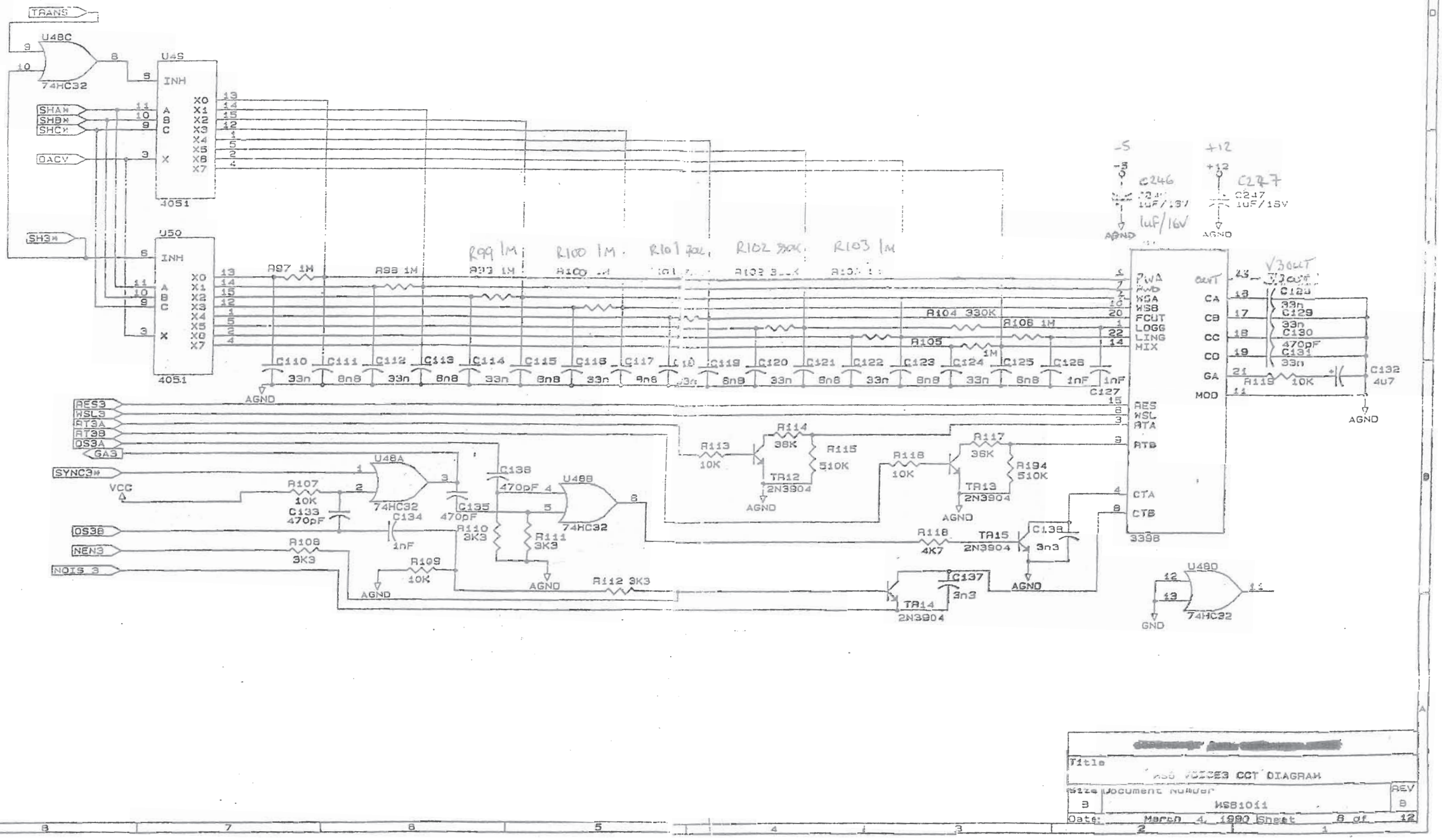

Title	MS6 VOICE3 CCT DIAGRAM		
Size B	Document Number MS81011		REV B
Date: March 4, 1990	Sheet 6 of 12		

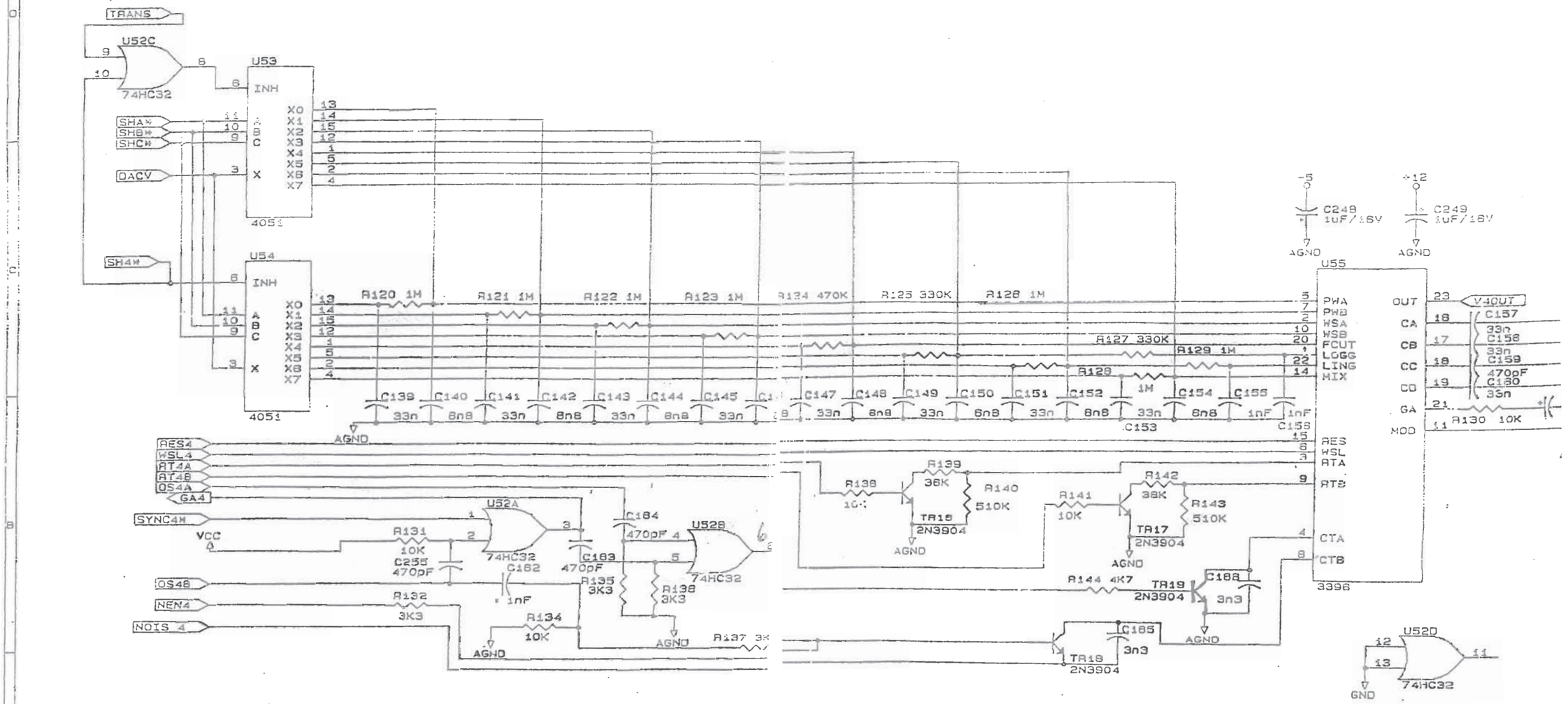

Title	MS8 VOICE4 CCT DIAGRAM
Size: B	Document Number: MS81011
Date: March 4, 1990	Sheet 7 of

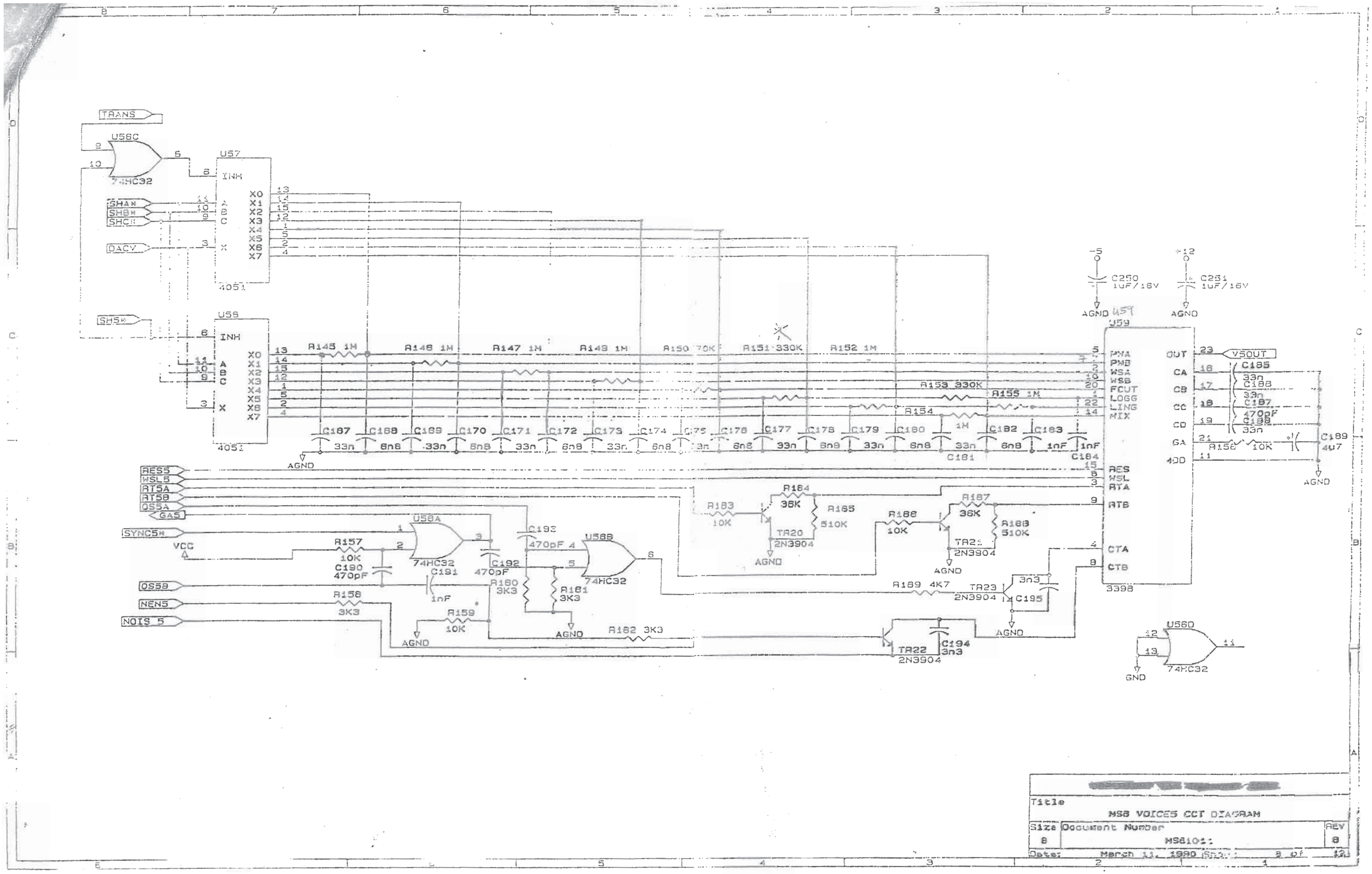

Title	MS8 VOICE5 CCT DIAGRAM	
Size: B	Document Number: MS81011	REV: B
Date: March 11, 1990	Sheet: 8 of 12	

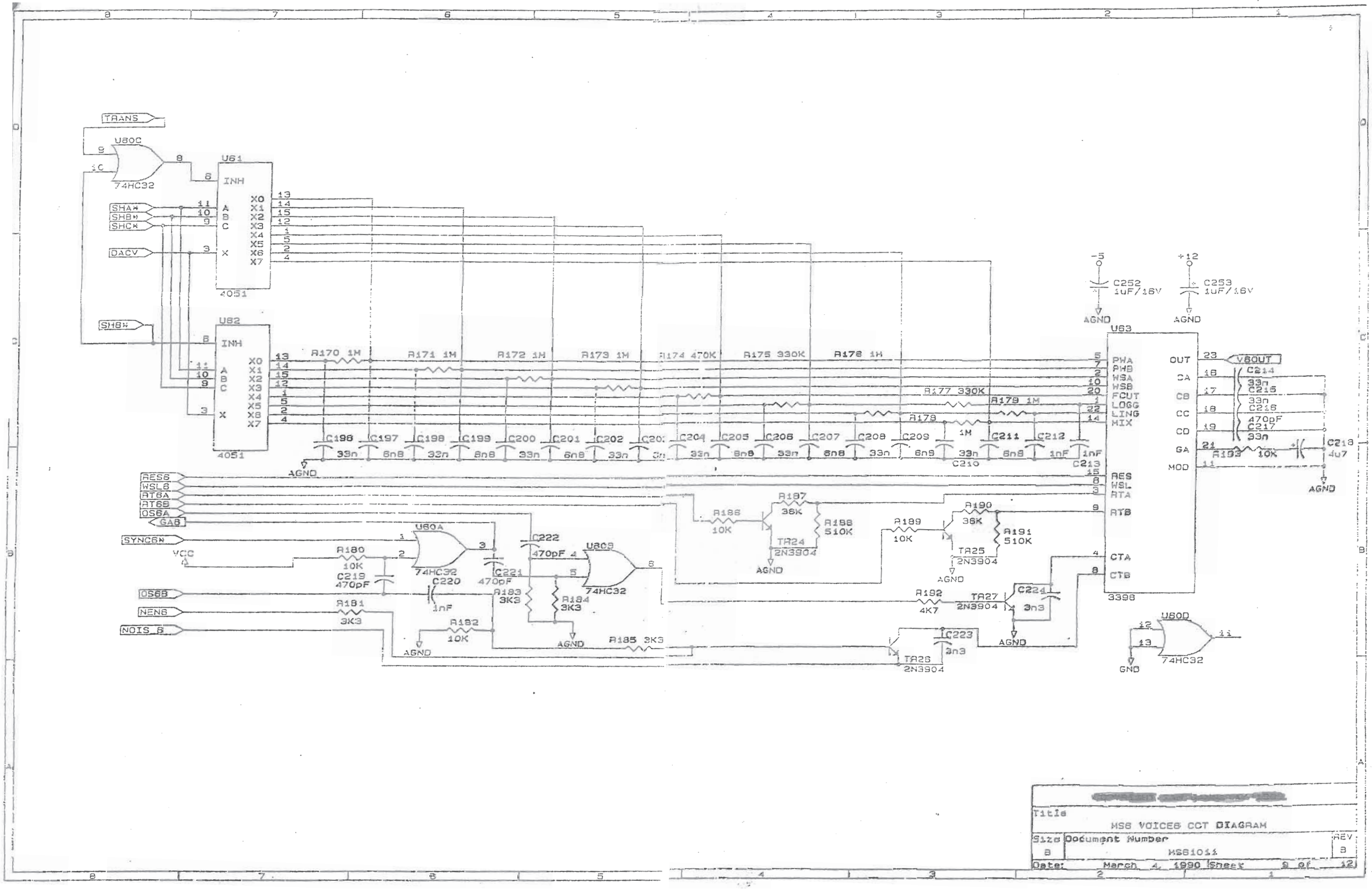

Title

MS6 VOICE6 CCT DIAGRAM

Size	Document Number	REV
B	MS61011	B

Date: March 4, 1990 Sheet 9 of 12

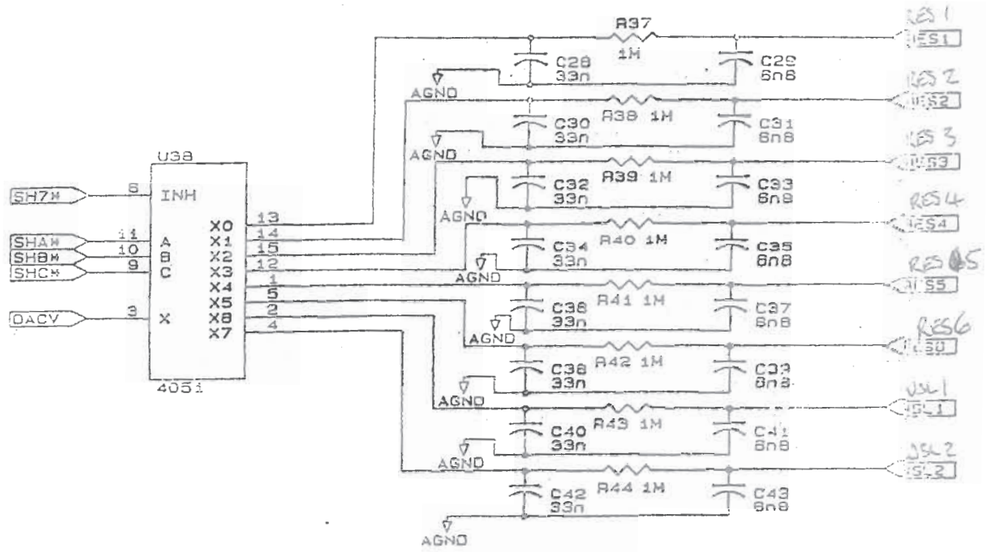

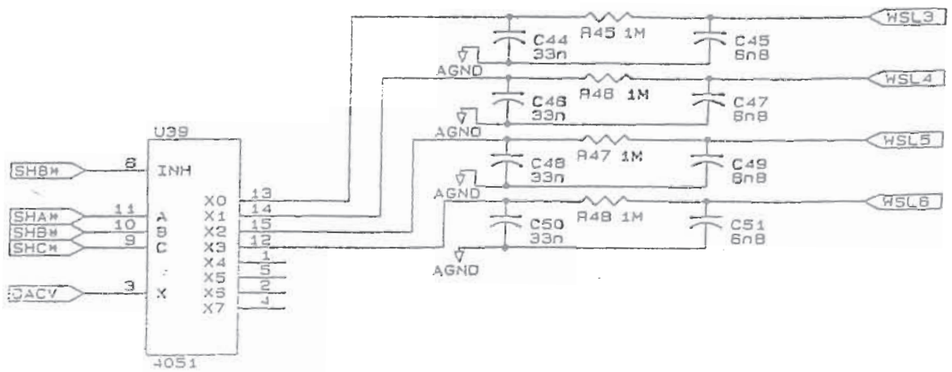

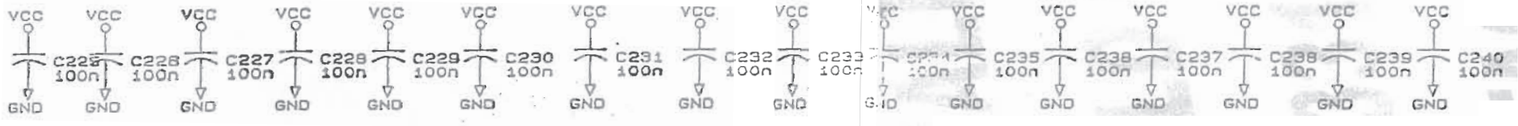

Title
MS8 MISC SAMPLE + HOLD + DECOUPLING

Size	Document Number	REV
B	MS81011	B

Date: February 25, 1990 Sheet 10 of 12

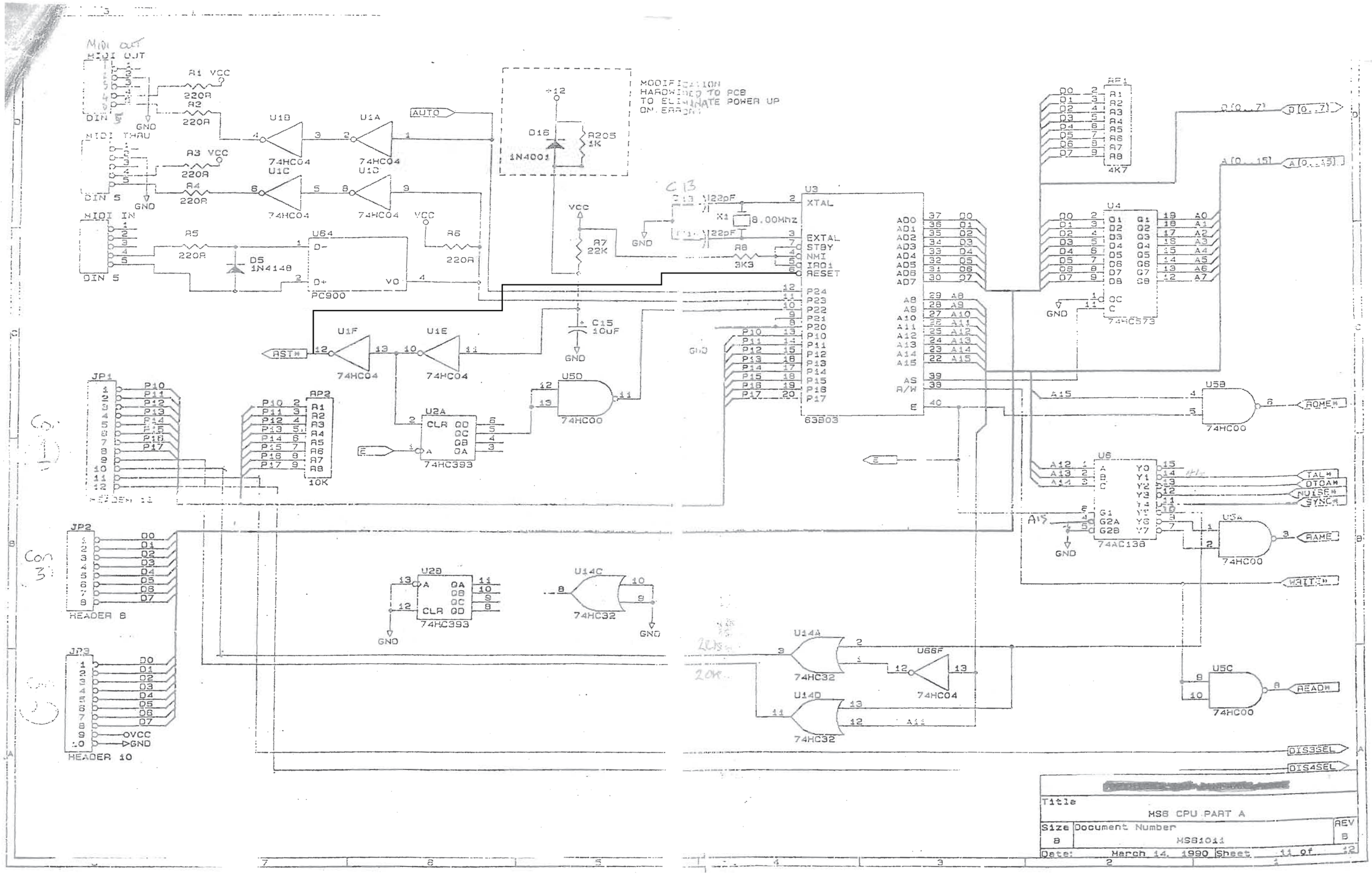
MIDI OUT
MIDI THRU
MIDI IN
DIN 5
R1 VCC
R2
R3 VCC
R4
220R
R5
R6
D5
1N4148
U1B
U1A
U1C
U1D
74HC04
U64
PC900
AUTO
MODIFICATION
HARDWIRED TO PCB
TO ELIMINATE POWER UP
ON ERRORS
D16
1N4001
R205
1K
R7
22K
C15
10uF
C13
X1
8.00Mhz
R8
3K3
U3
XTAL
EXTAL
STBY
NMI
IRQ1
RESET
63B03
RP1
4K7
U4
74HC573
U1F
U1E
RST*
U5D
74HC00
U2A
74HC393
RP2
10K
JP1
JP2
HEADER 8
JP3
HEADER 10
U2B
U14C
74HC32
U14A
U14D
U66F
U5B
ROME*
U6
74AC138
TAL*
DTOA*
NOISE*
SYNC*
U5A
RAME
WRITE*
U5C
READ*
DIS3SEL
DIS4SEL
Title
MS8 CPU PART A
Size
B
Document Number
MS81011
REV
B
Date: March 14, 1990
Sheet 11 of 12

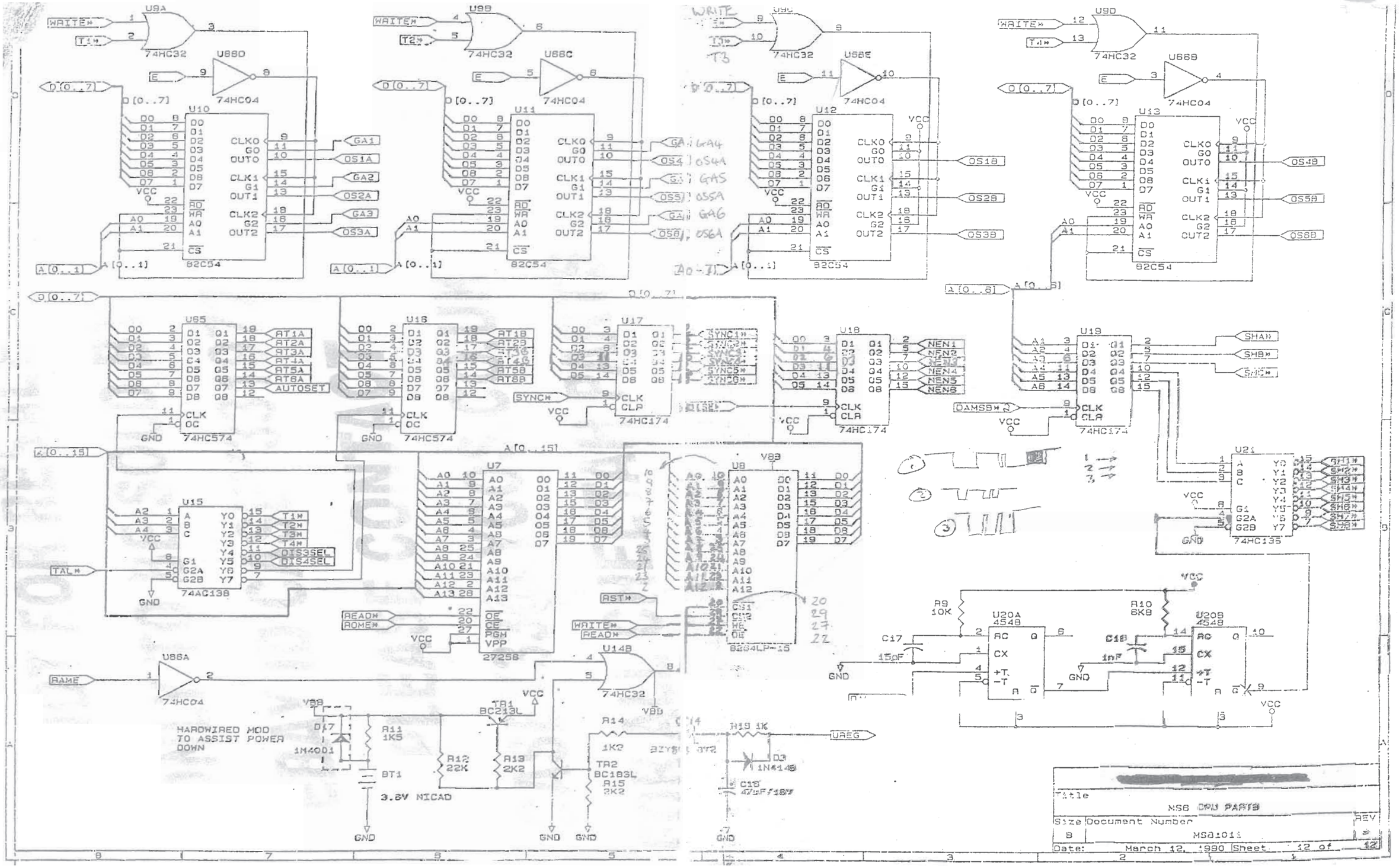

U9A
74HC32
U9B
74HC32
U9C
74HC32
U9D
74HC32
U66D
74HC04
U66C
74HC04
U66E
74HC04
U66B
74HC04
U10
82C54
U11
82C54
U12
82C54
U13
82C54
U65
74HC574
U16
74HC574
U17
74HC174
U18
74HC174
U19
74HC174
U15
74AC138
U7
27256
U8
8264LP-15
U21
74HC135
U20A
4548
U20B
4548
U66A
74HC04
U14B
74HC32
HARDWIRED MOD
TO ASSIST POWER
DOWN
3.6V NICAD
Title
MS6 CPU PARTS
Size
Document Number
REV
B
MS81011
Date: March 12, 1990
Sheet 12 of 12